This cut sheet was generated from Greenheck Shop Online and is for the product SKU referenced below. Cut sheets for accessories or ancillary products must be printed separately.

GREENHECK Shop Online

SKU
CUE-100-4VG119GQD

Job Name:
Mark:
Submitted By:
Date: 04/26/2024

Centrifugal Upblast Exhaust Fan, Product # CUE-100-4VG119GQD, 411-1468 CFM

Model CUE is a direct drive exhaust fan specifically designed for roof or sidewall mounted applications discharging the air directly upward, away from the roof or wall surface. The fans feature a one piece windband continuously welded to curb cap and double studded isolators for true vibration isolation.

- 19 x 19 inch base with prepunched mounting holes for easy attachment to roof curb
- Energy-efficient, speed controllable, Vari-green® motor
- Roof or wall mountable

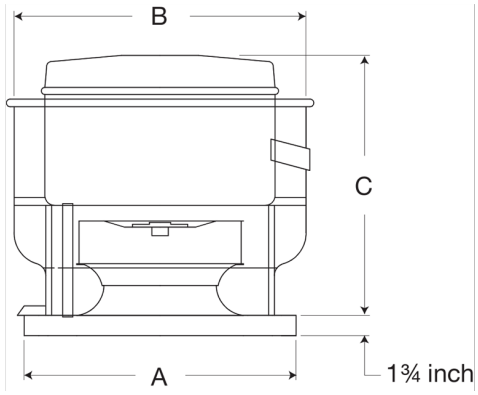

A	B	C
19 in	24.875 in	28.25 in

Certifications

AMCA Sound & Air

UL/cUL 705 Listed - Supplement SC - "Power Ventilators for Restaurant Exh. Appliances" (Formerly UL 762)

Performance Characteristics

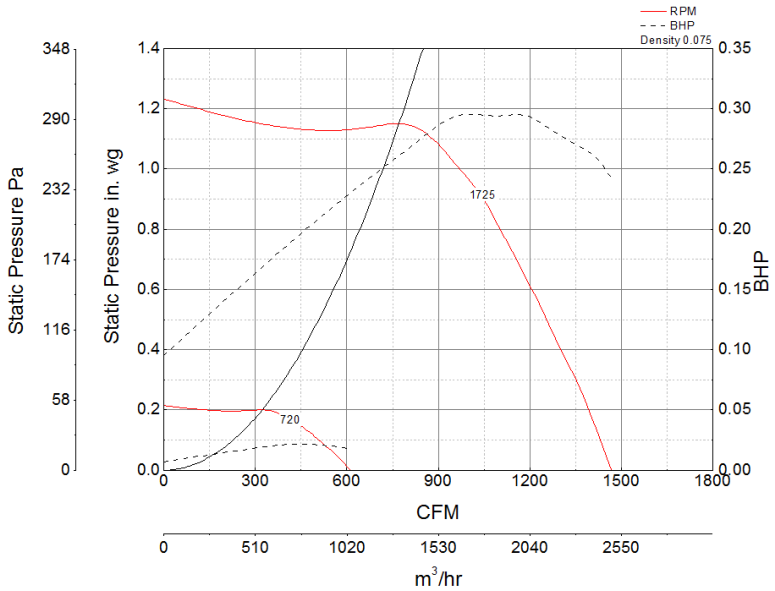

Construction Features

Housing Material	Spun Aluminum
Drive Type	Direct Drive
Impeller Type	Centrifugal Wheel
Impeller Material	Aluminum
Includes	Motor mounted potentiometer
Certifications	AMCA Sound & Air UL/cUL 705 Listed - Supplement SC - "Power Ventilators for Restaurant Exh. Appliances" (Formerly UL 762)
Speed Controllable	Yes
Required Accessory	Roof curb for new roof installations

Motor Information

Motor Insulation	B
Motor Phase	1
Service Factor	1.25
Voltage	115 208 230 277
HP	1/4
Hertz	60
Motor Enclosure	n/a
RPM	1800
Thermal Protection	AutoOverload
Nominal Efficiency	85

Air and Sound Performance

Motor HP	Max BHP	Max Fan RPM	Min Fan RPM	Ps (in. wg)	0	0.125	0.25	0.375	0.5	0.625	0.75	0.875	1
1/4	0.29	1725	720	CFM	1,468	1,422	1,373	1,315	1,255	1,195	1,129	1,062	970
				Sones	13.3	12.9	12.5	12	11.7	11.3	10.8	10.2	9.7

- Greenheck Fan Corporation certifies that the model shown herein is licensed to bear the AMCA Seal. The ratings shown are based on tests and procedures performed in accordance with AMCA Publication 211 and AMCA Publication 311 and comply with the requirements of the AMCA Certified Ratings Program.
- Performance certified is for installation type A: Free inlet, Free outlet.
- Power rating (BHP/kW) does not include transmission losses.
- Performance ratings do not include the effects of appurtenances (accessories).
- The sound ratings shown are loudness values in fan sones at 5 ft. (1.5 m) in a hemispherical free field calculated per AMCA Standard 301. Values shown are for installation type A: free inlet hemispherical sone levels.

California Residents

⚠ WARNING

This product can expose you to chemicals including cadmium used in the processing of corrosion resistant metal and fasteners, which is known to the State of California to cause cancer and birth defects or other reproductive harm. For more information visit www.P65Warnings.ca.gov