This cut sheet was generated from Greenheck Shop Online and is for the product SKU referenced below. Cut sheets for accessories or ancillary products must be printed separately.

GREENHECK Shop Online

SKU
CUBE-100-4119GQD

Job Name:
Mark:
Submitted By:
Date: 05/23/2025

Centrifugal Upblast Exhaust Fan, Product # CUBE-100-4119GQD, 861-1413 CFM

The CUBE is an aluminum exhaust fan specifically designed for roof or sidewall mounted applications where contaminated or grease laden exhaust air can be discharged directly upward, away from the roof or wall surface. The fans feature a one piece windband continuously welded to curb cap and double studded isolators for true vibration isolation.

- 19 x 19 inch base with prepunched mounting holes for easy attachment to roof curb
- Roof or wall mountable
- 15.5 x 15.5 inch recommended roof opening

Certifications

AMCA Sound & Air

UL/cUL 705 Listed - Supplement SC - "Power Ventilators for Restaurant Exh. Appliances" (Formerly UL 762)

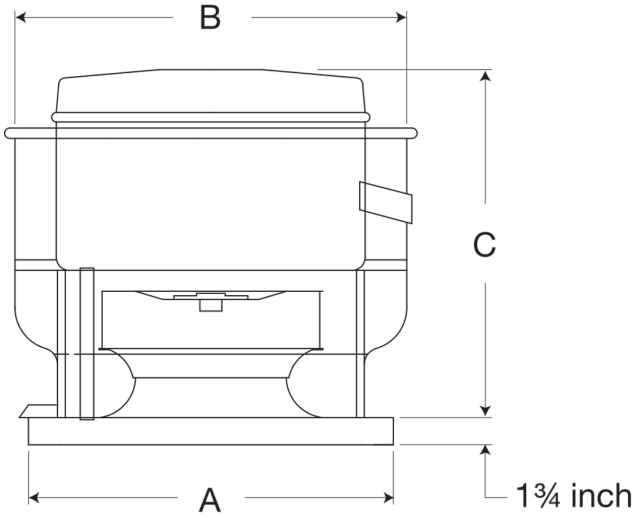

A	B	C
19 in	24.875 in	28.25 in

Performance Characteristics

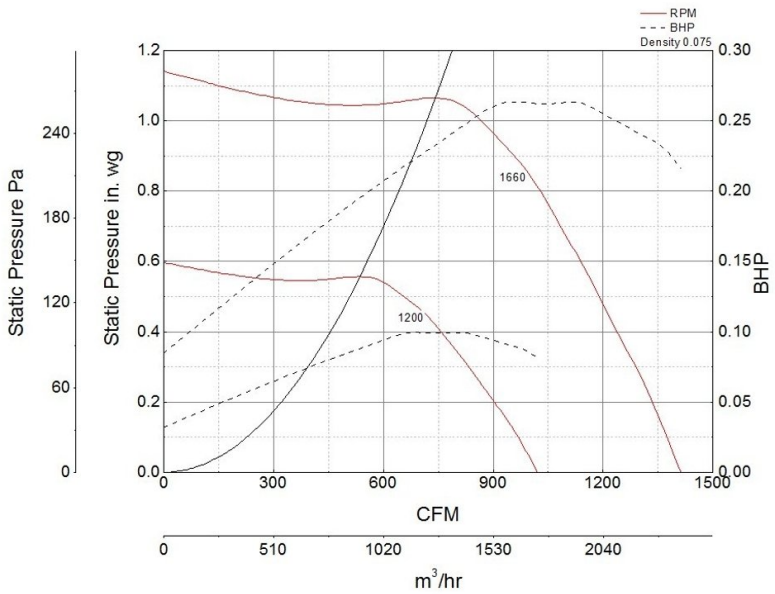

Construction Features

Housing Material	Spun Aluminum
Drive Type	Belt Drive
Impeller Type	Centrifugal Wheel
Impeller Material	Aluminum
Includes	Assembled drive package Disconnect switch
Certifications	AMCA Sound & Air UL/cUL 705 Listed - Supplement SC - "Power Ventilators for Restaurant Exh. Appliances" (Formerly UL 762)
Drive Package Description	Motor and drives assembled
Required Accessory	Roof curb for new roof installations

Motor Information

Motor Insulation	B
Motor Phase	1
Motor Type	NEMA
Service Factor	1.35
Voltage	115
HP	1/4
Hertz	60
Motor Enclosure	Open Drip Proof
RPM	1800
Thermal Protection	AutoOverload
Nominal Efficiency	75
NEMA Frame Size	48

Air and Sound Performance

Motor HP	Max BHP	Max Fan RPM	Min Fan RPM	Ps (in. wg)	0	0.125	0.25	0.375	0.5	0.625	0.75	0.875	1
1/4	0.26	1660	1200	CFM	1,413	1,365	1,313	1,251	1,189	1,125	1,056	974	861
				Sones	12.7	12.3	12	11.6	11.3	10.8	10.2	9.6	9.4

- Greenheck Fan Corporation certifies that the model shown herein is licensed to bear the AMCA Seal.
- The ratings shown are based on tests and procedures performed in accordance with AMCA Publication 211 and AMCA Publication 311 and comply with the requirements of the AMCA Certified Ratings Program.
- Performance certified is for installation type A: Free inlet, Free outlet.
- Power rating (BHP/kW) includes transmission losses.
- Performance ratings do not include the effects of appurtenances (accessories).
- The sound ratings shown are loudness values in fan sones at 5 ft. (1.5 m) in a hemispherical free field calculated per AMCA Standard 301. Values shown are for installation type A: free inlet hemispherical sone levels.

California Residents

⚠ WARNING

This product can expose you to chemicals including cadmium used in the processing of corrosion resistant metal and fasteners, which is known to the State of California to cause cancer and birth defects or other reproductive harm. For more information visit www.P65Warnings.ca.gov