This cut sheet was generated from Greenheck Shop Online and is for the product SKU referenced below. Cut sheets for accessories or ancillary products must be printed separately.

GREENHECK Shop Online

SKU
SAF-115-15X-3-QD-DR2

Job Name:
Mark:
Submitted By:
Date: 06/05/2025

Centrifugal Supply Fan, Product # SAF-115-15X-3-QD-DR2, 1648-4640 CFM

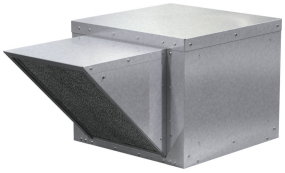

Model SAF is a filtered supply fan designed to provide non-tempered make-up air to commercial or industrial buildings, including commercial kitchen applications. Fresh outdoor air is supplied to replace air lost through hood exhaust or general building ventilation.

- 34.5 x 34.5 inch base with prepunched mounting holes for easy attachment to roof curb
- Permanent washable aluminum filters allow for many years of reliable use
- 26.5 x 26.5 inch recommended roof opening

Certifications

AMCA Sound & Air
UL/cUL 705

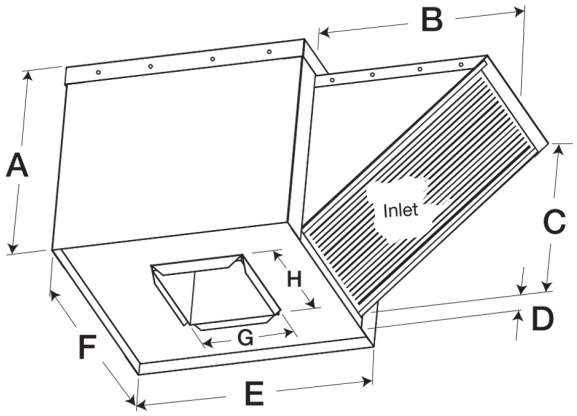

A	B	C	D	E	F	G	H
32.062 5 in	29.25 in	27.375 in	2 in	34.5 in	35.062 5 in	16.062 5 in	18.812 5 in

Performance Characteristics

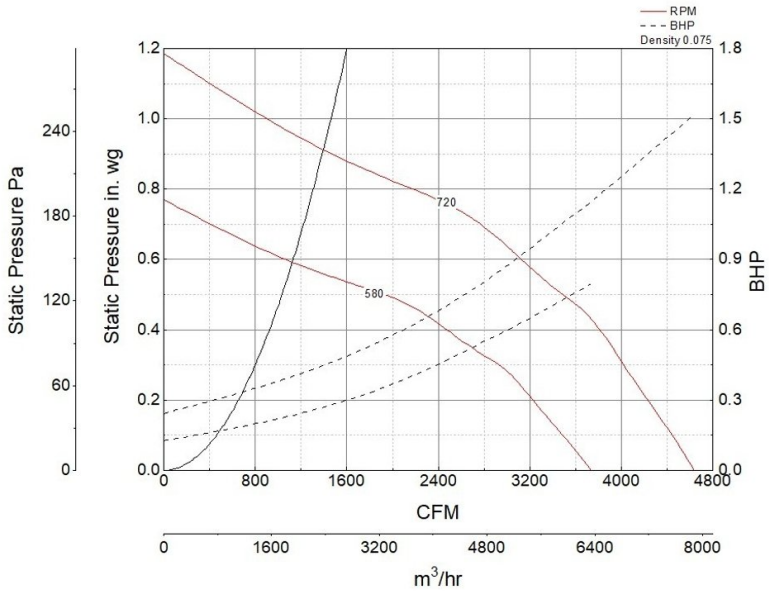

Construction Features

Housing Material	Galvanized Steel
Drive Type	Belt Drive
Impeller Type	Forward curved wheel
Impeller Material	Aluminum
Includes	Access Panels Unassembled drive package Washable, aluminum 1-inch filters
Certifications	AMCA Sound & Air UL/cUL 705
Drive Package Description	Motor and drives shipped loose
Required Accessory	Roof curb for new roof installations

Motor Information

Motor Insulation	F
Motor Phase	3
Motor Type	NEMA
Service Factor	1.15
Voltage	208-230/460
HP	1 1/2
Hertz	60
Motor Enclosure	Open Drip Proof
RPM	1800
Thermal Protection	Thermostat
Nominal Efficiency	88.5
NEMA Frame Size	145T

Air and Sound Performance

Motor HP	Max BHP	Max Fan RPM	Min Fan RPM	Ps (in. wg)	0	0.125	0.25	0.375	0.5	0.625	0.75	0.875
1 1/2	1.52	720	580	CFM	4,640	4,391	4,124	3,860	3,478	3,042	2,483	1,648
				Sones	24	23	21	20	18.4	16.6	15.2	14.4

California Residents

⚠ WARNING

This product can expose you to chemicals including cadmium used in the processing of corrosion resistant metal and fasteners, which is known to the State of California to cause cancer and birth defects or other reproductive harm. For more information visit www.P65Warnings.ca.gov

⚠ WARNING