This cut sheet was generated from Greenheck Shop Online and is for the product SKU referenced below. Cut sheets for accessories or ancillary products must be printed separately.

GREENHECK Shop Online

SKU

G-130-7VG119XQD

Job Name:

Mark:

Submitted By:

Date: 11/27/2026

Centrifugal Downblast Exhaust Fan, Product # G-130-7VG119XQD, 626-2448 CFM

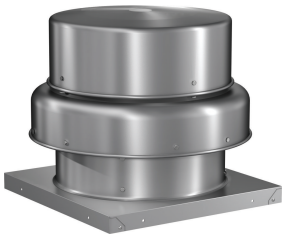

Model G, direct drive centrifugal roof exhaust fans provide the industry's best performance and durability for general clean air applications where air is discharged downward, toward the roof. Units feature the most advanced motor cooling of any fan in its class.

- 19 x 19 inch base with prepunched mounting holes for easy attachment to roof curb
- Energy-efficient, speed controllable, Vari-green® motor
- 15.5 x 15.5 inch recommended roof opening

Certifications

AMCA Sound & Air

High Wind and Hurricane

Seismic

UL/cUL 705

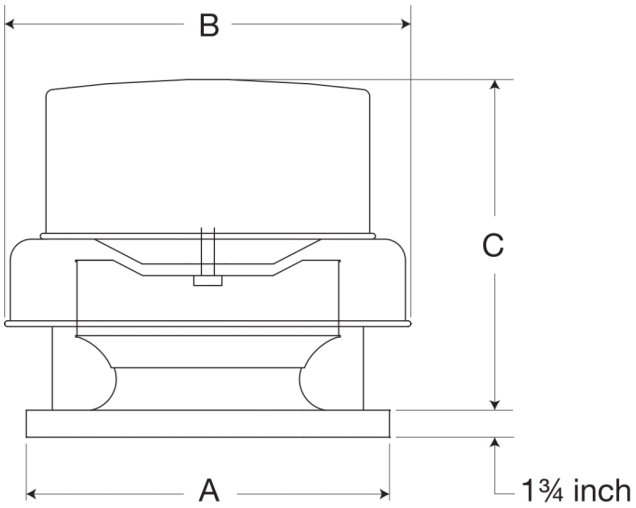

A	B	C
19 in	28.375 in	23.75 in

Performance Characteristics

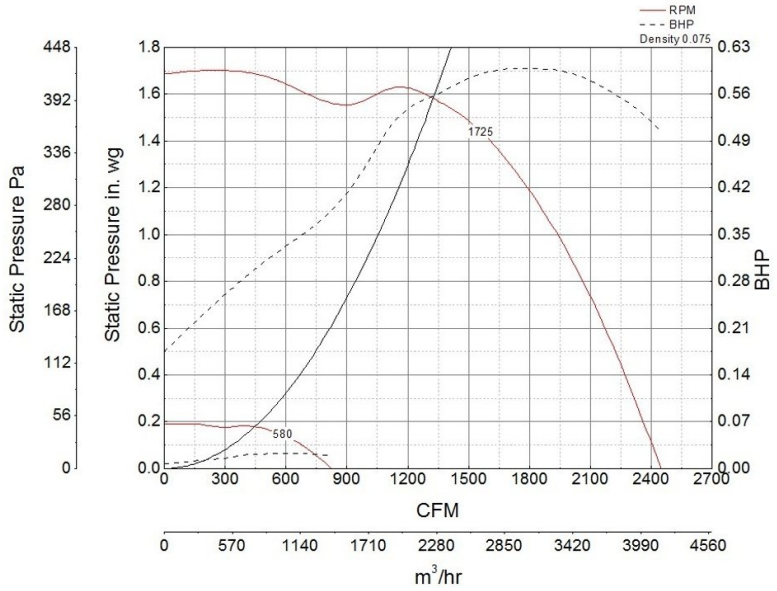

Construction Features

Housing Material	Spun Aluminum
Drive Type	Direct Drive
Impeller Type	Centrifugal Wheel
Impeller Material	Aluminum
Includes	Motor mounted potentiometer
Certifications	AMCA Sound & Air High Wind and Hurricane Seismic UL/cUL 705
Speed Controllable	Yes
Required Accessory	Roof curbs for new installations

Motor Information

Motor Insulation	B
Motor Phase	1
Motor Type	BrushlessDC
Service Factor	1

Voltage	115/208-230
HP	3/4
Hertz	60
Motor Enclosure	n/a
RPM	1800
Thermal Protection	AutoOverload
Nominal Efficiency	85
NEMA Frame Size	56

Air and Sound Performance

Motor HP	Max BHP	Max Fan RPM	Min Fan RPM	Ps (in. wg)	0	0.125	0.25	0.375	0.5	0.625	0.75	0.875	1	1.25	1.5
3/4	0.60	1725	580	CFM	2,448	2,393	2,338	2,281	2,220	2,159	2,089	2,018	1,935	1,746	1,474
				Sones	17.5	17.2	16.9	16.5	16.2	15.9	15.5	15.1	14.8	14.2	13.8

- Greenheck Fan Corporation certifies that the model shown herein is licensed to bear the AMCA Seal. The ratings shown are based on tests and procedures performed in accordance with AMCA Publication 211 and AMCA Publication 311 and comply with the requirements of the AMCA Certified Ratings Program.
- Performance certified is for installation type A: Free inlet, Free outlet.
- Power rating (BHP/kW) does not include transmission losses.
- Performance ratings include the effects of birdscreen.
- The sound ratings shown are loudness values in fan sones at 5 ft. (1.5 m) in a hemispherical free field calculated per AMCA Standard 301. Values shown are for installation type A: free inlet hemispherical sone levels.

California Residents

⚠ WARNING

This product can expose you to chemicals including cadmium used in the processing of corrosion resistant metal and fasteners, which is known to the State of California to cause cancer and birth defects or other reproductive harm. For more information visit www.P65Warnings.ca.gov