QB-24

Quilted Thermal Blanket
3 hour fire resistance rating

QB-24 is a refractory thermal blanket consists of a non-asbestos high temperature ceramic fiber blanket quilted between two layers of fiberglass cloth. This quilted thermal blanket material is listed with UL to be used as an accessory to Greenheck's ceiling radiation dampers or to be used as batt and blanket material.

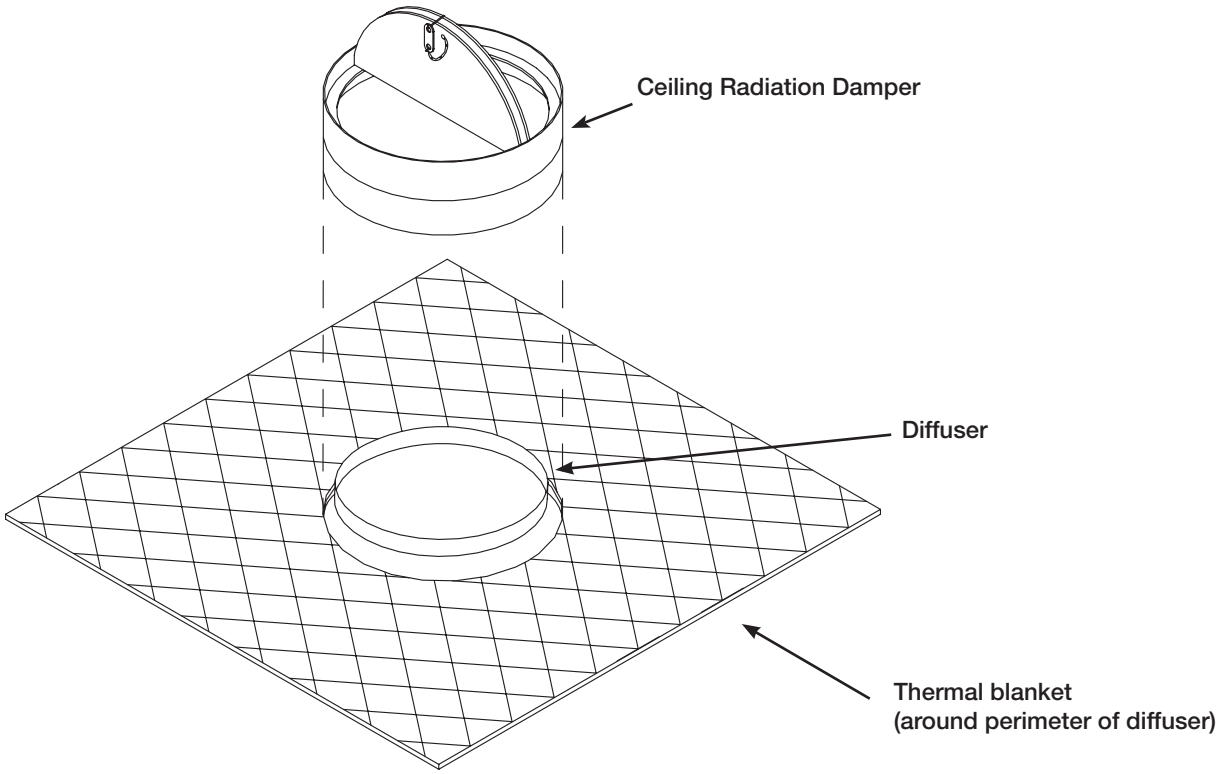

Stock size available is 24 in. x 24 in. (610mm x 610mm).

Physical properties:

Color..... Gray
Nominal Density ..... 10- 12 lb/ft^3 (160 -192 kg/m^3)
Use limit, (max) ..... 2300°F (1260°C)
Melting point ..... 3200°F (1760°C)
Thickness..... .10 in. (2.5mm)

Copyright © 2005 Greenheck Fan Corporation
QB-24 Rev.1 April 2005

P.O. Box 410 • Schofield, WI 54476-0410 • 715.359.6171 • greenheck.com