NFB24-SR, NFB24-SR-S, NFX24-SR, NFX24-SR-S

Proportional, Spring Return, 24 V, for 2 or 10 VDC or 4 to 20 mA Control Signal

Torque min. 90 in-lb, for control of air dampers

Application

For proportional modulation of dampers in HVAC systems. Actuator sizing should be done in accordance with the damper manufacturer's specifications.

The actuator is mounted directly to a damper shaft up to 1.05" in diameter by means of its universal clamp. A crank arm and several mounting brackets are available for applications where the actuator cannot be direct coupled to the damper shaft.

The actuator operates in response to a 2 to 10 VDC, or with the addition of a 500Ω resistor, a 4 to 20 mA control input from an electronic controller or positioner. A 2 to 10 VDC feedback signal is provided for position indication. Not to be used for a master-slave application.

Operation

The NFB and NFX series actuators provide true spring return operation for reliable fail-safe application and positive close-off on air tight dampers. The spring return system provides constant torque to the damper with, and without, power applied to the actuator.

The NFB and NFX series provides 95° of rotation and is provided with a graduated position indicator showing 0° to 95°.

The NFB24-SR and NFX24-SR uses a brushless DC motor which is controlled by an Application Specific Integrated Circuit (ASIC) and a microprocessor. The microprocessor provides the intelligence to the ASIC to provide a constant rotation rate and to know the actuator's exact fail-safe position. The ASIC monitors and controls the brushless DC motor's rotation and provides a digital rotation sensing function to prevent damage to the actuator in a stall condition. The actuator may be stalled anywhere in its normal rotation without the need of mechanical end switches.

The NFB24-SR-S and NFX24-SR-S versions are provided with two built-in auxiliary switches. These SPDT switches provide safety interfacing or signaling, for example, for fan start-up. The switching function at the fail-safe position is fixed at +10°, the other switch function is adjustable between +10° to +90°. The NFB24-SR, NFB24-SR-S, NFX24-SR and NFX24-SR-S actuator is shipped at +5° (5° from full fail-safe) to provide automatic compression against damper gaskets for tight shut-off.

Technical Data		NFB24-SR, NFB24-SR-S, NFX24-SR, NFX24-SR-S
Power supply		24 VAC ±20%, 50/60 Hz 24 VDC +20% / -10%
Power consumption	running	3.5 W
	holding	2.5 W
Transformer sizing		6 VA (class 2 power source)
Electrical connection		
NFB...		3 ft, 18 GA appliance cable, 1/2" conduit connector **-S models:** two 3 ft, 18 gauge appliance cables with 1/2" conduit connectors
NFX...		3 ft [1m], 10 ft [3m] or 16 ft [5m] 18 GA appliance or plenum cables, with or without 1/2" conduit connector **-S models:** Two 3 ft [1m], 10 ft [3m] or 16 ft [5m] appliance cables, with or without 1/2" conduit connectors
Overload protection		electronic throughout 0 to 95° rotation
Operating range Y		2 to 10 VDC, 4 to 20mA
Input impedance		100 kΩ for 2 to 10 VDC (0.1 mA) 500 Ω for 4 to 20 mA
Feedback output U		2 to 10 VDC (max. 0.5 mA)
Torque		90 in-lb [10 Nm] minimum
Direction of rotation	spring	reversible with CW/CCW mounting
	motor	reversible with built-in switch
Mechanical angle of rotation		95° (adjustable with mechanical end stop, 35° to 95°)
Running time	spring	< 20 seconds @ -4°F to 122°F [-20°C to 50°C]; < 60 seconds @ -22°F [-30°C]
	motor	95 seconds
Position indication		visual indicator, 0° to 95° (0° is full spring return position)
Manual override		5 mm hex crank (3⁄16" Allen), supplied
Humidity		max. 95% RH non-condensing
Ambient temperature		-22°F to 122°F [-30°C to 50°C]
Storage temperature		-40°F to 176°F [-40°C to 80°C]
Housing		Nema 2, IP54, Enclosure Type2
Housing material		zinc coated metal and plastic casing
Agency listings†		cULus acc. to UL60730-1A/-2-14, CAN/CSA E60730-1:02, CE acc. to 2004/108/EC & 2006/95/EC
Noise level		≤40dB(A) motor @ 95 seconds ≤62dB(A) spring return
Servicing		maintenance free
Quality standard		ISO 9001
Weight		4.15 lbs (1.9 kg); 4.4 lbs (2.0 kg) with switches

† Rated Impulse Voltage 800V, Type of action 1.AA (1.AA.B for -S version), Control Pollution Degree 3.

NFB24-SR-S, NFX24-SR-S	
Auxiliary switches	2 x SPDT 3A (0.5A) @ 250 VAC, UL approved one set at +10°, one adjustable 10° to 90°

Dimensions (Inches [mm])

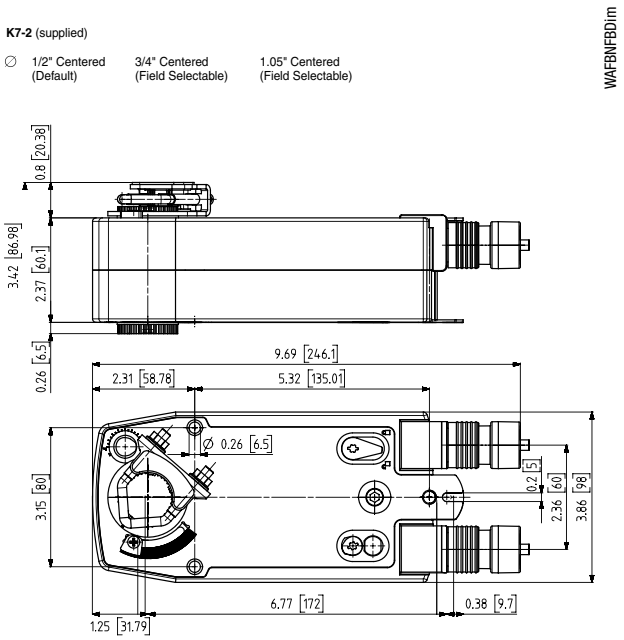

M40024 - 05/10 - Subject to change. © Belimo Aircontrols (USA), Inc.

Accessories

AV 8-25	Shaft extension
IND-AFB	Damper position indicator
KH-AFB	Crank arm
K7-2	Universal clamp for up to 1.05” dia jackshafts
TF-CC US	Conduit fitting
Tool-06	8mm and 10 mm wrench
ZG-100	Universal mounting bracket
ZG-101	Universal mounting bracket
ZG-118	Mounting bracket for Barber Colman® MA 3../4.., Honeywell® Mod III or IV or Johnson® Series 100 replacement or new crank arm type installations
ZG-AFB	Crank arm adaptor kit
ZG-AFB118	Crank arm adaptor kit
ZS-100	Weather shield (metal)
ZS-150	Weather shield (polycarbonate)
ZS-260	Explosion-proof housing
ZS-300	NEMA 4X housing

NOTE: When using NFB24-SR, NFB24-SR-S, NFX24-SR and NFX24-SR-S actuators, only use accessories listed on this page.
For actuator wiring information and diagrams, refer to Belimo Wiring Guide.

Typical Specification

Spring return control damper actuators shall be direct coupled type which require no crank arm and linkage and be capable of direct mounting to a jackshaft up to a 1.05” diameter. The actuator must provide proportional damper control in response to a 2 to 10 VDC or, with the addition of a 500Ω resistor, a 4 to 20 mA control input from an electronic controller or positioner. The actuators must be designed so that they may be used for either clockwise or counterclockwise fail-safe operation. Actuators shall use a brushless DC motor controlled by a microprocessor and be protected from overload at all angles of rotation. Run time shall be constant, and independent of torque. A 2 to 10 VDC feedback signal shall be provided for position feedback. Actuators shall be cULus Approved and have a 5 year warranty, and be manufactured under ISO 9001 International Quality Control Standards. Actuators shall be as manufactured by Belimo.

Wiring Diagrams

INSTALLATION NOTES

1 Provide overload protection and disconnect as required.

2 ***CAUTION** Equipment Damage!*
Actuators may be connected in parallel.
Power consumption and input impedance must be observed.

2 Up to 4 actuators may be connected in parallel. With 4 actuators wired to one 500 Ω resistor. Power consumption must be observed.

3 Actuator may also be powered by 24 VDC.

4 For end position indication, interlock control, fan startup, etc., NFB24-SR-S and NFX24-SR-S incorporates two built-in auxiliary switches: 2 x SPDT, 3A (0.5A) @250 VAC, UL Approved, one switch is fixed at +10°, one is adjustable 10° to 90°.

5 Only connect common to neg. (–) leg of control circuits

APPLICATION NOTES

♦ The ZG-R01 500 Ω resistor converts the 4 to 20 mA control signal to 2 to 10 VDC.

***WARNING** Live Electrical Components!*
During installation, testing, servicing and troubleshooting of this product, it may be necessary to work with live electrical components. Have a qualified licensed electrician or other individual who has been properly trained in handling live electrical components perform these tasks. Failure to follow all electrical safety precautions when exposed to live electrical components could result in death or serious injury.

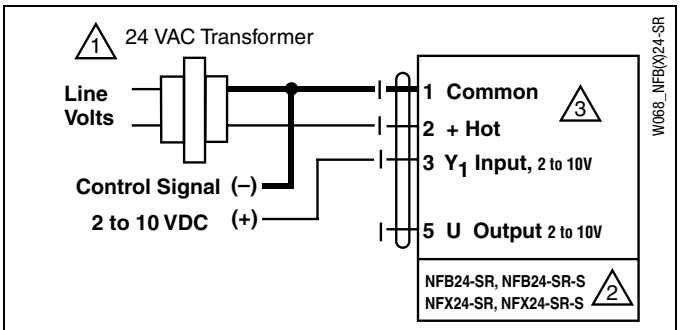

2 to 10 VDC control of NFB24-SR and NFX24-SR

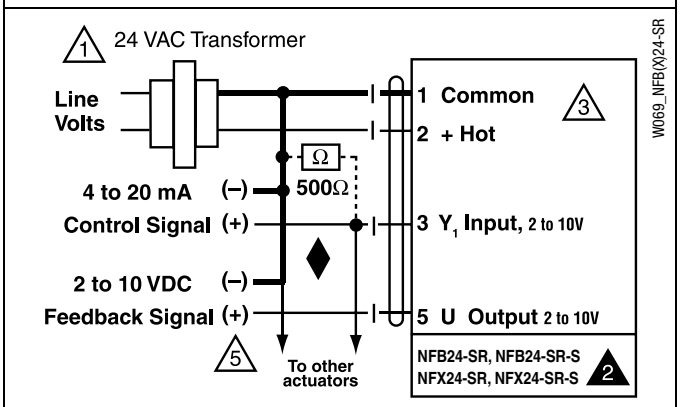

4 to 20 mA control of NFB24-SR and NFX24-SR with 2 to 10 VDC feedback output

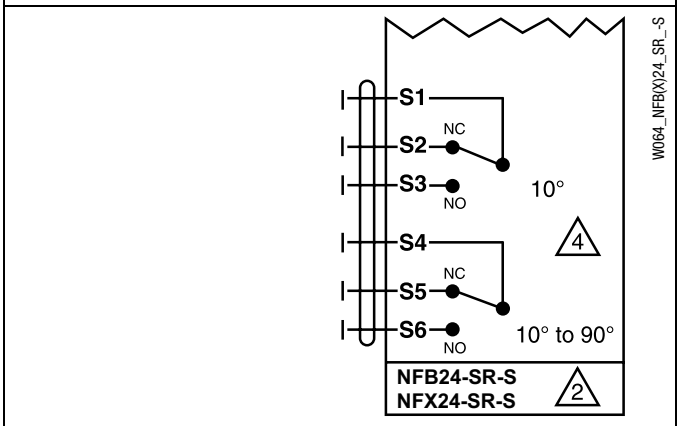

Auxiliary switches for NFB24-SR-S, NFX24-SR-S

M40024 - 05/10 - Subject to change. © Belimo Aircontrols (USA), Inc.

Product Cross Reference
Current to New Generation

			NF24-SR US, NF24-SR-S US	NFB24-SR, NFB24-SR-S, NFX24-SR, NFX24-SR-S
OPERATION	**Torque**		60 in-lb [7 Nm] minimum	90 in-lb. [10 Nm] minimum
	Running Time	**Motor**	150 seconds constant, independent of load	95 seconds
		Spring	< 60 seconds	20 seconds @ -4°F to 122°F [-20°C to 50°C]; <60 seconds @ -22°F [-30°C]
	Noise Level		Max. 45 dB (A)	≤40dB(A) motor @ 95 seconds; ≤62dB(A) spring return
	Motor Technology		Brushless DC Motor	Brushless DC Motor
	Overload Protection		Electronic throughout 0 to 95° rotation	Electronic throughout 0° to 95° rotation
	Operating Temperature		-22°F to +122°F [-30°C to +50°C]	-22°F to 122°F [-30°C to 50°C]
	Operating Humidity		5 to 95% RH non-condensing	5 to 95% RH, non-condensing
CONTROL	**Operating Range 'Y'**		2 to 10 VDC, 4 to 20mA	2 to 10 VDC, 4 to 20 mA
	Input Impedance		100 kΩ (0.1 mA), 500 Ω	100 kΩ for 2 to 10 VDC (0.1 mA); 500 Ω for 4 to 20 mA
	Feedback Output 'U'		2 to 10 VDC (max. 0.5 mA) for 95°	2 to 10 VDC (max 0.5 mA)
MOUNTING & COMMISSIONING	**Dimensions (L x W x H) [mm]**		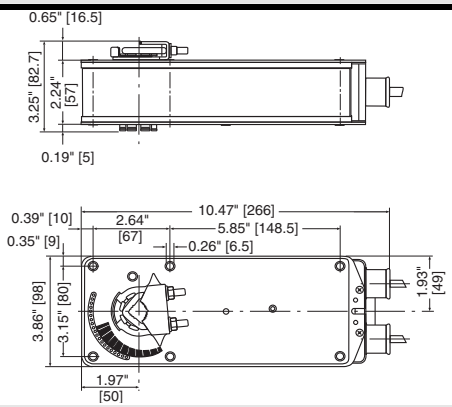	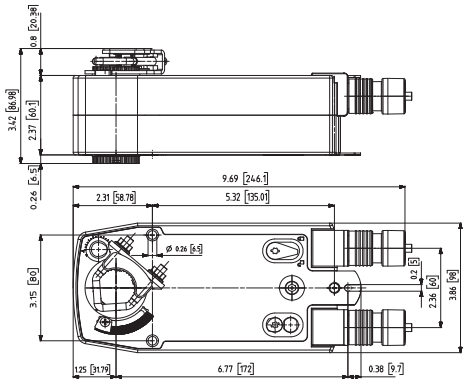
	With Conduit Fitting		10.47" [266] x 3.86" [98] x 3.25" [82.7]	9.69" [246] x 3.86" [98] x 3.42" [87]
	Shaft Dimensions		Up to 1.05"	Up to 1.05"
	Direction of Rotation	**Motor**	Reversible with built-in switch	Reversible with built-in switch
		Spring	Reversible with CW/CCW mounting	Reversible with CW/CCW mounting
	Manual Override		N/A	5 mm hex crank (3/16" Allen), supplied
	Position Indication		Visual indicator, 0° to 95° (0° is Spring Return position)	Visual indicator, 0° to 95° (0° is Spring Return position)
	Angle of Rotation		95°, adjustable 30° to 95° w/ ZDB-AF2 US accessory	95° (adjustable with mechanical end stop, 35° to 95°)

Product Cross Reference
Current to New Generation

		NF24-SR US, NF24-SR-S US	NFB24-SR, NFB24-SR-S, NFX24-SR, NFX24-SR-S
ELECTRICAL WIRING	**Power Supply**	24 VAC ± 20% 50/60 Hz; 24 VDC ± 10%	24 VAC, +/- 20%, 50/60 Hz; 24 VDC, +20/-10%
	Power Consumption **Running**	3 W	3.5 W
	Power Consumption **Holding**	1 W	2.5 W
	Transformer Sizing	6 VA (Class 2 power source)	6 VA (Class 2 power source)
	Auxiliary Switches	**(-S Models)**: 1 x SPDT 7A (2.5A) @ 250 VAC, UL listed adjustable 5° to 85°	**(-S Models)**: Two SPDT 3A (0.5A inductive) @ 250V UL approved, one set at +10°, one adjustable 10° to 90°
	Electrical Connection	3 ft, 18 GA appliance cable 1/2" conduit connector; **(-S Models)**: Two 3 ft, 18 GA, appliance cables, ½" conduit connectors	3 ft, 18 GA, appliance cable, ½" conduit connector; **(-S Models)**: Two 3 ft, 18 GA, appliance cables, ½" conduit connectors; Optional 10 or 16 ft cables and plenum rated cables (non -S models only) with X types
CONSTRUCTION	**Housing Rating**	NEMA 2, IP54	NEMA 2, IP54, Enclosure Type2
	Housing Material	Zinc coated metal	Zinc coated metal and plastic casing
	Agency Listings	UL 873 listed, CSA C22.2 No.24 certified	cULus acc. to UL60730-1A/-2-14, CAN/CSA E60730-1:02, CE acc. to 2004/108/EC & 2006/95/EC
	Storage Temperature	-40°F to +176°F [-40°C to +80°C]	-40°F to 176°F [-40°C to 80°C]
	Weight	6.0 lbs (2.7 kg)	4.15 lbs (1.9 kg), **(-S Models)**:4.25 lbs (1.9 kg)