GREENHECK

Model DFD-M230

Multi-Blade Fire Dampers

Steel 3V Blades

UL555 3 Hour Fire Resistance Rating

Application

Model DFD-M230 is a multi-blade fire damper with 3V style blades. The DFD-M230 has been qualified to 10.2 m/s (2000 fpm) and 1.0 kPa (4 in. wg.) for dynamic closure in emergency fire situations. Model DFD-M230 may be installed vertically (with blades running horizontal) or horizontally and is rated for airflow in either direction.

Ratings

UL 555 Fire Resistance Rating

Fire Rating: 3 Hours
Dynamic Closure Rating: Actual limits are size dependent
Maximum Velocity: 10.2 m/s (2000 fpm)
Maximum Pressure: 1 kPa (4 in. wg)

Construction	Standard	Optional
Frame Material	Galvanized steel	-
Frame Material Thickness	1.5mm (16 ga.)	-
Frame Type	127mm x 25mm (5 in. x 1in.) hat channel	-
Blade Material	Galvanized steel	-
Blade Material Thickness	1.5mm (16 ga.)	-
Blade Type	3V	-
Linkage	Plated steel out of airstream, concealed in jamb	-
Axle Bearings	Bronze	-
Axle Material	Plated steel	-
Jamb Seals	304SS	-
Closure Device	Fusible link	-
Closure Temperature	74°C (165°F) UL	100°C (212°F), 141°C (286°F), 177°C (350°F) UL
Actuator	Manual quadrant	-

W x H	*Minimum Size*	*Maximum Size*	
		Single Section	*Multi-Section*
mm	203 x 152	914 x 914 or 813 x 1219	1626 x 1219
Inches	8 x 6	36 x 36 or 32 x 48	64 x 48

Model DFD-M230 is intended for installation in accordance with fire damper requirements established by:

National Fire Protection Association
NFPA Standards 80, 90A & 101

IBC International Building Codes

"UL CLASSIFIED (see complete marking on product)"
"UL CLASSIFIED to Canadian safety standards (see complete marking on product)"
Standard 555 (Listing #R13317)

Greenheck Kunshan Co. Ltd. and Greenheck Fan Corporation certifies that the model DFD-M230 shown herein is licensed to bear the AMCA Seal. The ratings shown are based on tests and procedures performed in accordance with AMCA Publication 511 and comply with the requirements of the AMCA Certified Ratings Programs. The AMCA Certified Ratings Seal applies to air performance ratings only.

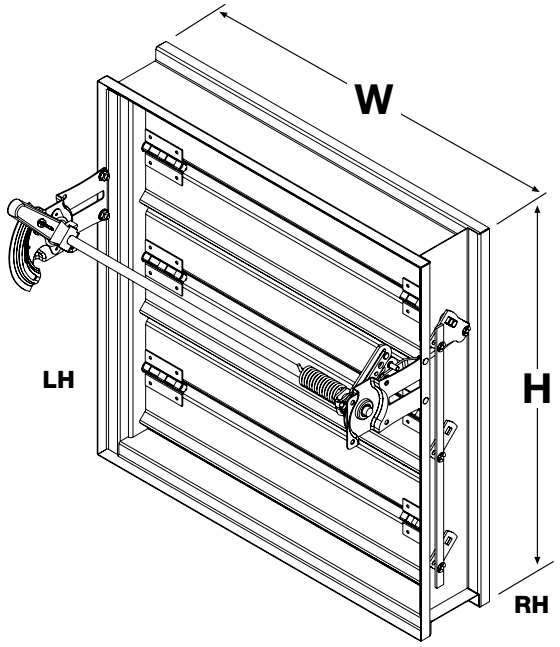

*W & H dimensions furnished approximately 6mm (1/4 in.) undersize. (Add sleeve thickness for overall sleeved damper dimension)

Features

- Frames are constructed with reinforced corners. Low profile head and sill are used on sizes less than 432mm (17 in.) high.
- Blades are reinforced with 3 longitudinal structurally designed vee's.

Options

- Extra Fusible Links
- Flanges
- OCI (Open Closed Indication switches)
- POC retaining angles
- Sleeves
- Transitions (R, C)

Installation instructions available at www.greenheck.com

Pressure Drop Data DFD-M230

This pressure drop testing was conducted in accordance with AMCA Standard 500-D using the three configurations shown. All data has been corrected to represent standard air at a density of 1.201 kg/m^3.

Actual pressure drop found in any HVAC system is a combination of many factors. This pressure drop information along with an analysis of other system influences should be used to estimate actual pressure losses for a damper installed in a given HVAC system.

AMCA Test Figures

Figure 5.3 Illustrates a fully ducted damper. This configuration has the lowest pressure drop of the three test configurations because entrance and exit losses are minimized by straight duct runs upstream and downstream of the damper.

Figure 5.2 Illustrates a ducted damper exhausting air into an open area. This configuration has a lower pressure drop than Figure 5.5 because entrance losses are minimized by a straight duct run upstream of the damper.

Figure 5.5 Illustrates a plenum mounted damper. This configuration has the highest pressure drop because of extremely high entrance and exit losses due to the sudden changes of area in the system.

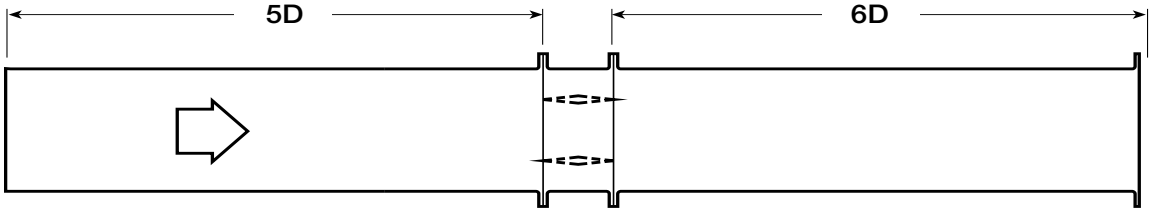

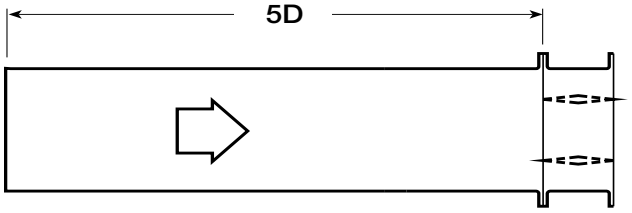

$$D \sqrt{\frac{4\,(W)\,(H)}{3.14}}$$

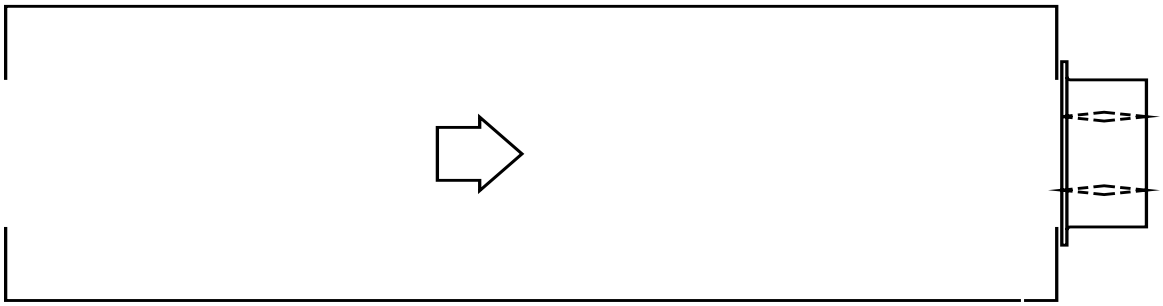

AMCA 5.2 Pressure Drop

DFD-M230

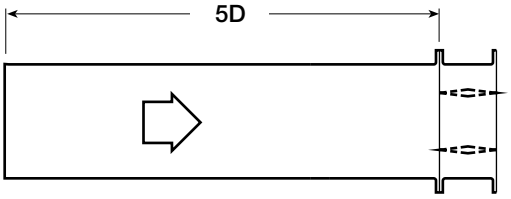

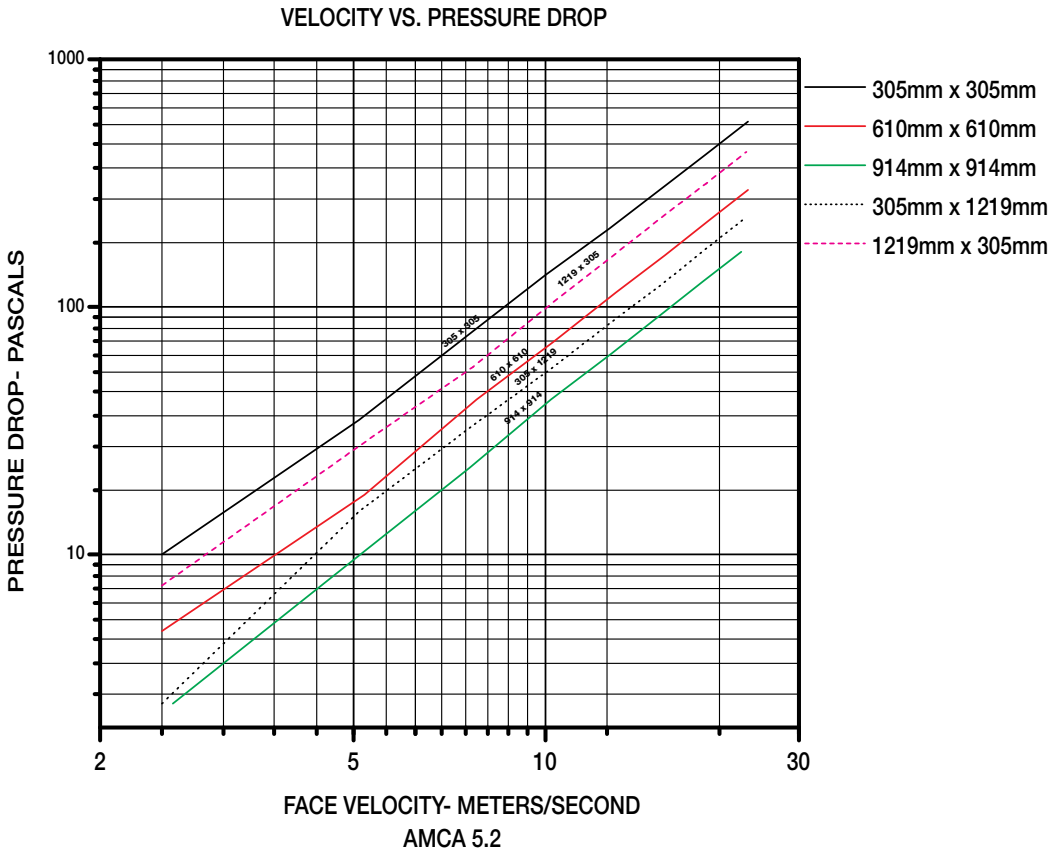

305mm x 305mm	
Velocity (m/s)	Pressure Drop (Pa)
2.5	10
5.1	35
7.7	80
10	135
12.6	207
15.5	311
17.8	411
20.8	561

610mm x 610mm	
Velocity (m/s)	Pressure Drop (Pa)
2.5	5
5.2	17
7.8	42
10.3	72
12.9	115
15.4	162
18.1	224
20.8	296

914mm x 914mm	
Velocity (m/s)	Pressure Drop (Pa)
2.6	3
5.1	10
7.6	22
10.2	42
12.7	65
15.3	95
17.7	127
20.3	167

305mm x 1219mm	
Velocity (m/s)	Pressure Drop (Pa)
2.5	3
5.1	15
7.6	32
10.3	57
12.9	90
15.3	125
18	174
20.5	227

1219mm x 305mm	
Velocity (m/s)	Pressure Drop (Pa)
2.5	8
5.1	27
7.7	57
10.3	105
12.9	164
15.6	242
17.9	316
20.7	424

Greenheck Kunshan Co. Ltd. and Greenheck Fan Corporation certifies that the model DFD-M230 shown herein is licensed to bear the AMCA Seal. The ratings shown are based on tests and procedures performed in accordance with AMCA Publication 511 and comply with the requirements of the AMCA Certified Ratings Programs. The AMCA Certified Ratings Seal applies to air performance ratings only.

AMCA 5.3 Pressure Drop

DFD-M230

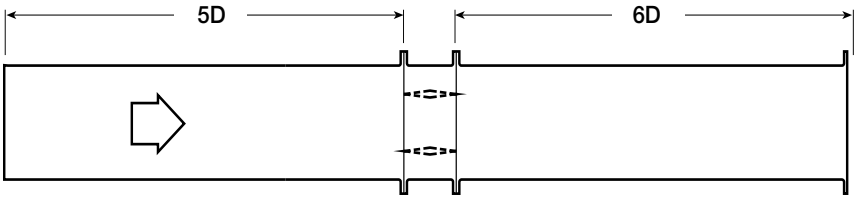

VELOCITY VS. PRESSURE DROP

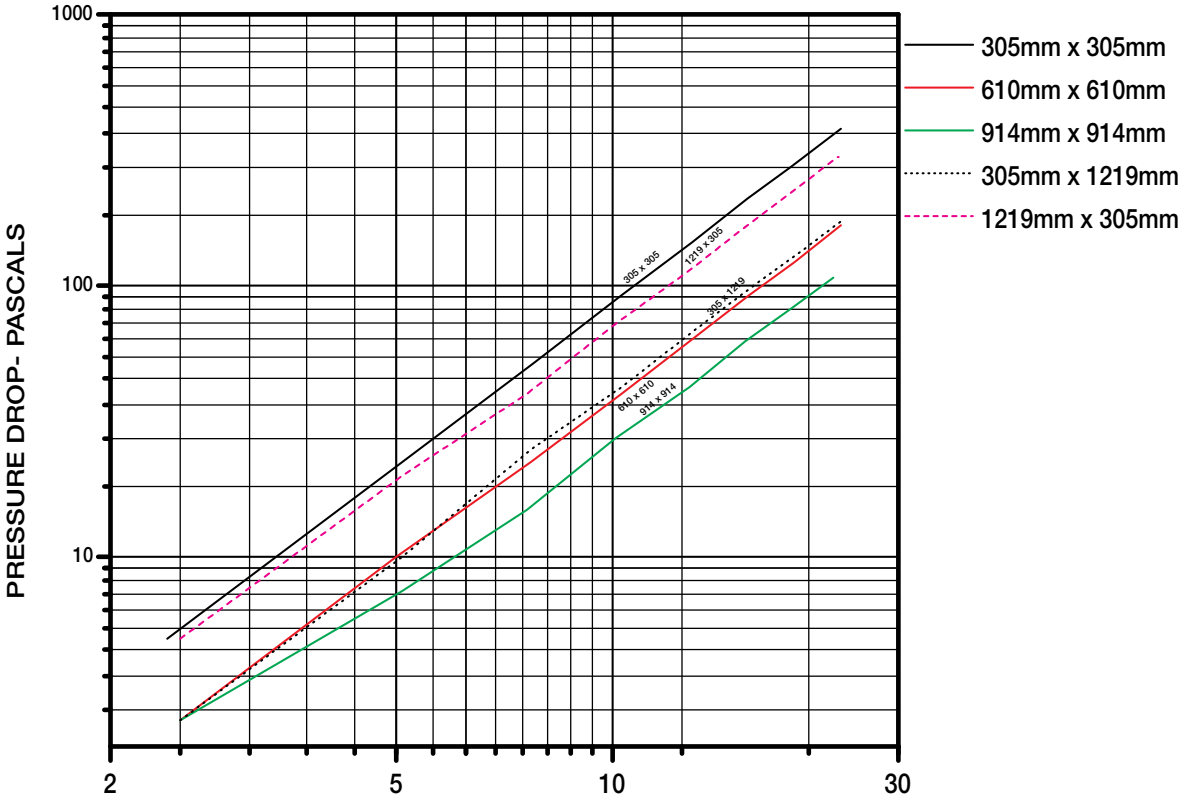

AMCA 5.3

305mm x 305mm	
Velocity (m/s)	Pressure Drop (Pa)
2.4	5
5.1	22
7.8	52
10.3	92
12.9	145
15.4	209
17.7	274
20.8	379

610mm x 610mm	
Velocity (m/s)	Pressure Drop (Pa)
2.5	3
5	10
7.7	22
10.3	40
12.8	62
15.5	92
17.9	122
20.8	167

914mm x 914mm	
Velocity (m/s)	Pressure Drop (Pa)
2.5	3
5.1	8
7.6	15
10.1	27
12.8	42
15.3	62
17.7	82
20.3	107

305mm x 1219mm	
Velocity (m/s)	Pressure Drop (Pa)
2.5	3
5.1	10
7.7	25
10.3	42
12.9	67
15.7	100
18.7	140
20.9	174

1219mm x 305mm	
Velocity (m/s)	Pressure Drop (Pa)
2.5	5
5.1	20
7.6	40
10.1	72
12.7	112
15.3	164
18	227
20.6	299

Greenheck Kunshan Co. Ltd. and Greenheck Fan Corporation certifies that the model DFD-M230 shown herein is licensed to bear the AMCA Seal. The ratings shown are based on tests and procedures performed in accordance with AMCA Publication 511 and comply with the requirements of the AMCA Certified Ratings Programs. The AMCA Certified Ratings Seal applies to air performance ratings only.

AMCA 5.5 Pressure Drop

DFD-M230

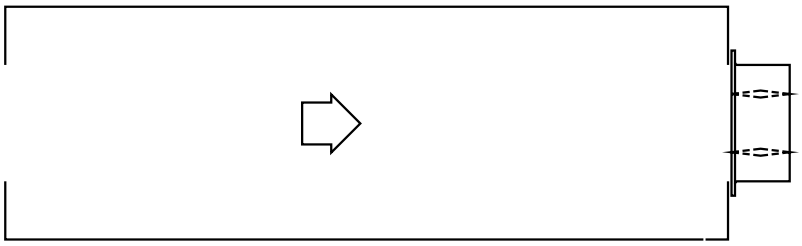

VELOCITY VS. PRESSURE DROP

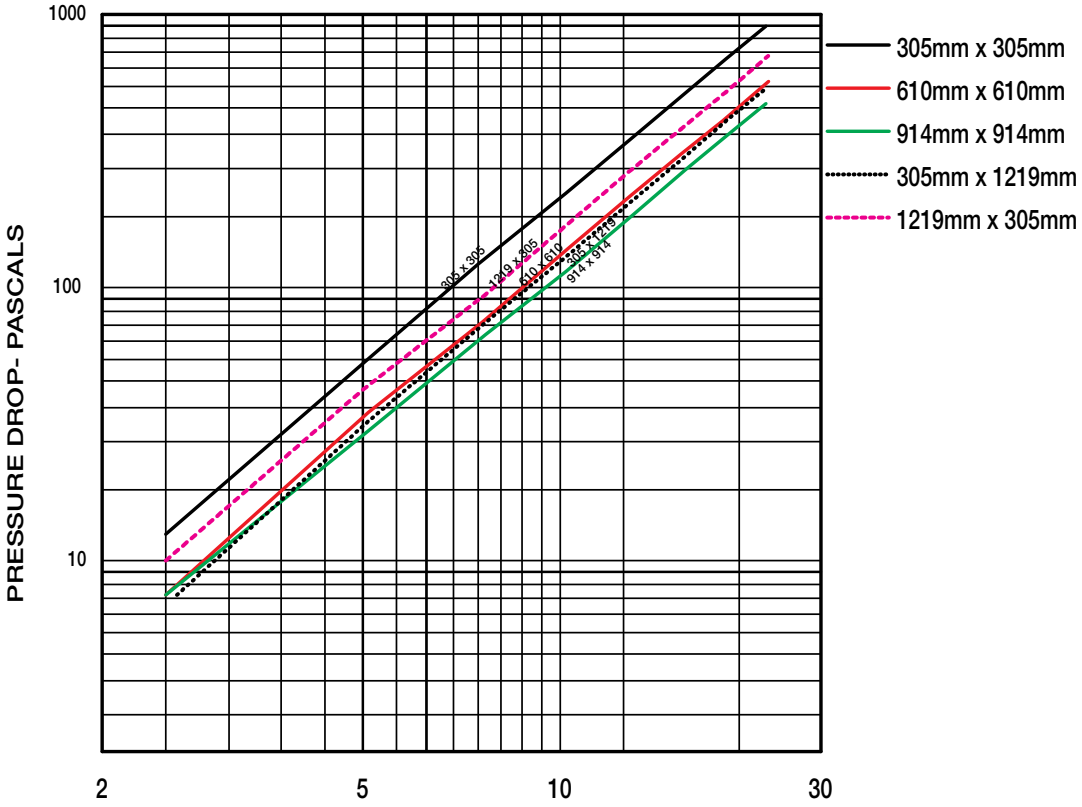

FACE VELOCITY- METERS/SECOND

AMCA 5.5

305mm x 305mm	
Velocity (m/s)	Pressure Drop (Pa)
2.5	13
5	55
7.5	122
10.2	222
12.7	349
15.4	508
17.9	688
20.6	907

610mm x 610mm	
Velocity (m/s)	Pressure Drop (Pa)
2.5	8
5	35
7.6	75
10.3	140
12.8	217
15.3	309
17.7	409
20.8	568

914mm x 914mm	
Velocity (m/s)	Pressure Drop (Pa)
2.5	8
5.1	30
7.7	67
10.2	115
12.9	184
15.5	269
18.1	354
20.6	471

305mm x 1219mm	
Velocity (m/s)	Pressure Drop (Pa)
2.6	8
5.1	32
7.7	75
10.2	130
12.7	202
15.5	301
18.1	416
20.6	536

1219mm x 305mm	
Velocity (m/s)	Pressure Drop (Pa)
2.5	1
5	42
7.7	95
10.3	172
12.7	264
15.3	381
17.9	521
20.8	707

Greenheck Kunshan Co. Ltd. and Greenheck Fan Corporation certifies that the model DFD-M230 shown herein is licensed to bear the AMCA Seal. The ratings shown are based on tests and procedures performed in accordance with AMCA Publication 511 and comply with the requirements of the AMCA Certified Ratings Programs. The AMCA Certified Ratings Seal applies to air performance ratings only.

Damper Sizing Information

The following figure shows maximum damper section size.

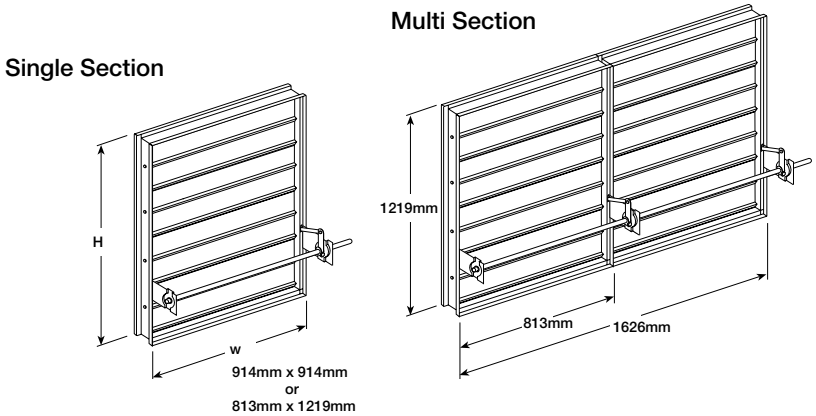

Damper Sleeve Dimensional Data

The drawings below and corresponding table show the position of the DFD-M230 damper when mounted in a factory sleeve. The standard mounting locations provide enough space for the mounting of manual quadrant, controls and allow space for installation of retaining angles and duct connections.

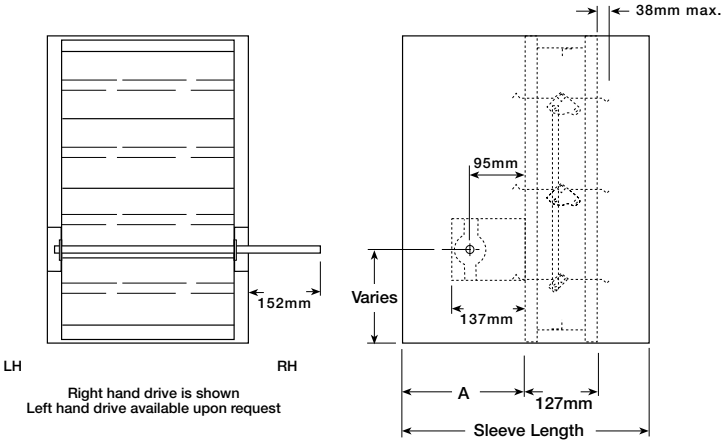

The "A" dimension is the location of the damper mounted in a factory sleeve. The table below shows the Standard, Minimum, and Maximum "A" dimensions.

	"A" Dimension		
	Standard	Minimum	Maximum
All Dampers	183mm	137mm	406mm

[1]All dampers w/o OCI.

Note: Entire damper frame is not required to be installed within the wall.

The damper blades, when closed, should be contained in the wall.

Specifications

Fire Dampers meeting the following specifications shall be furnished and installed where shown on plans and/or as described in schedules. Dampers shall meet the requirements of the latest edition of NFPA 80, 90A, and 101.

Dampers shall be tested, rated and labeled in accordance with the latest edition of UL Standard 555. Dampers shall have a UL 555 fire rating of 3 hours. Each damper shall be equipped with a heat responsive device which has been tested and approved for use with the damper assembly in accordance with UL 555. The heat responsive device shall have a temperature rating of (specifier select one of the following) 74ºC, 100ºC, 141ºC, or 177ºC. Dampers shall be UL labeled for use in dynamic systems. The damper shall have a dynamic closure pressure rating of 1 kPa.

Damper actuator shall be manual quadrant. Manufacturers submittal data shall indicate actuator space requirements around the damper.

UL 555 Dynamic Closure Ratings shall be qualified for airflow and pressure in either direction through the damper. UL ratings shall allow for mounting damper vertically (with blades running horizontal) or horizontally.

The Damper Manufacturers submittal data shall certify all air performance pressure drop data is licensed in accordance with the AMCA Certified Ratings Program for Test Figures 5.2, 5.3 and 5.5. Damper air performance data shall be developed in accordance with the latest edition of AMCA Standard 500-D.

Damper blades shall be 1.5mm galvanized steel 3V type with three longitudinal grooves for reinforcement. Blades shall be completely symmetrical relative to their axle pivot point, presenting identical resistance to airflow and operation in either direction through the damper (blades that are non-symmetrical relative to their axle pivot point or utilize blade stops larger than 13mm are unacceptable).

Damper frame shall be 1.5mm galvanized steel formed into a structural hat channel shape with reinforced corners. Bearings shall be sintered bronze sleeve type rotating in extruded holes in the damper frame for maximum service. Axles shall be square and positively locked into the damper blade. Jamb seals shall be stainless steel compression type.

Basis of design is Greenheck Model DFD-M230.

GREENHECK
Greenheck Kunshan Co Ltd.
17 Qunyi Minying District • Kunshan Economic &
Technical Development Zone
Kunshan, Jiangsu, China 215300
Tel: 0512-573-66666 • Fax: 0512-573-78633

Copyright © 2009 Greenheck Fan Corporation
DFD-M230 Rev. 5 April 2009